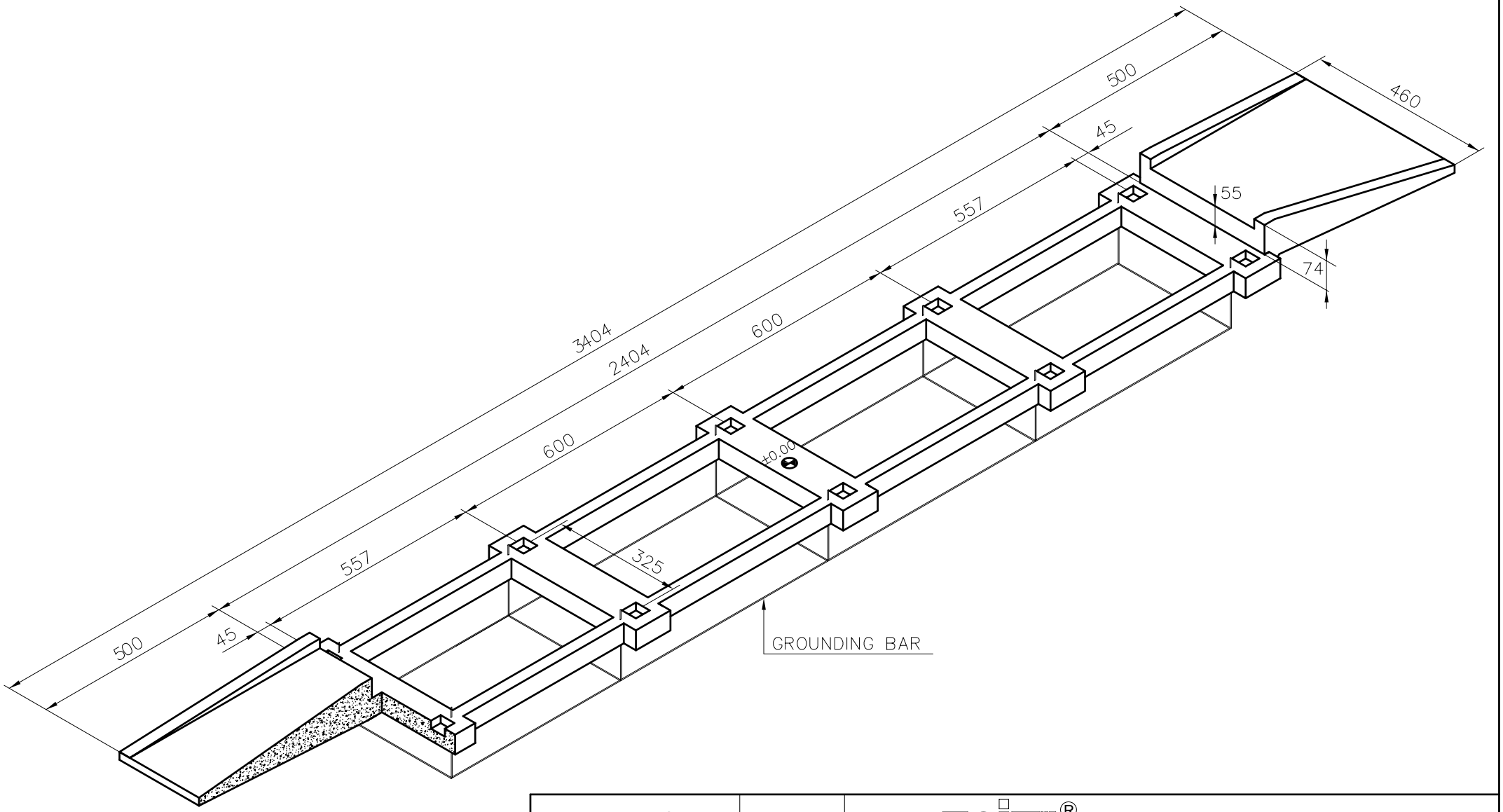

DRAWN BY: B.ÇINAR							
CONTROL: V.AKGÜN							
REVISION							DATE
A	B	C	D	E	F	G	18/09/2008

ESİT® LTD.

www.esitscale.com

DESCRIPTION

BRAND :ESİT

MODEL :3x24m 80t JUMBO-S Truck Scale Foundation