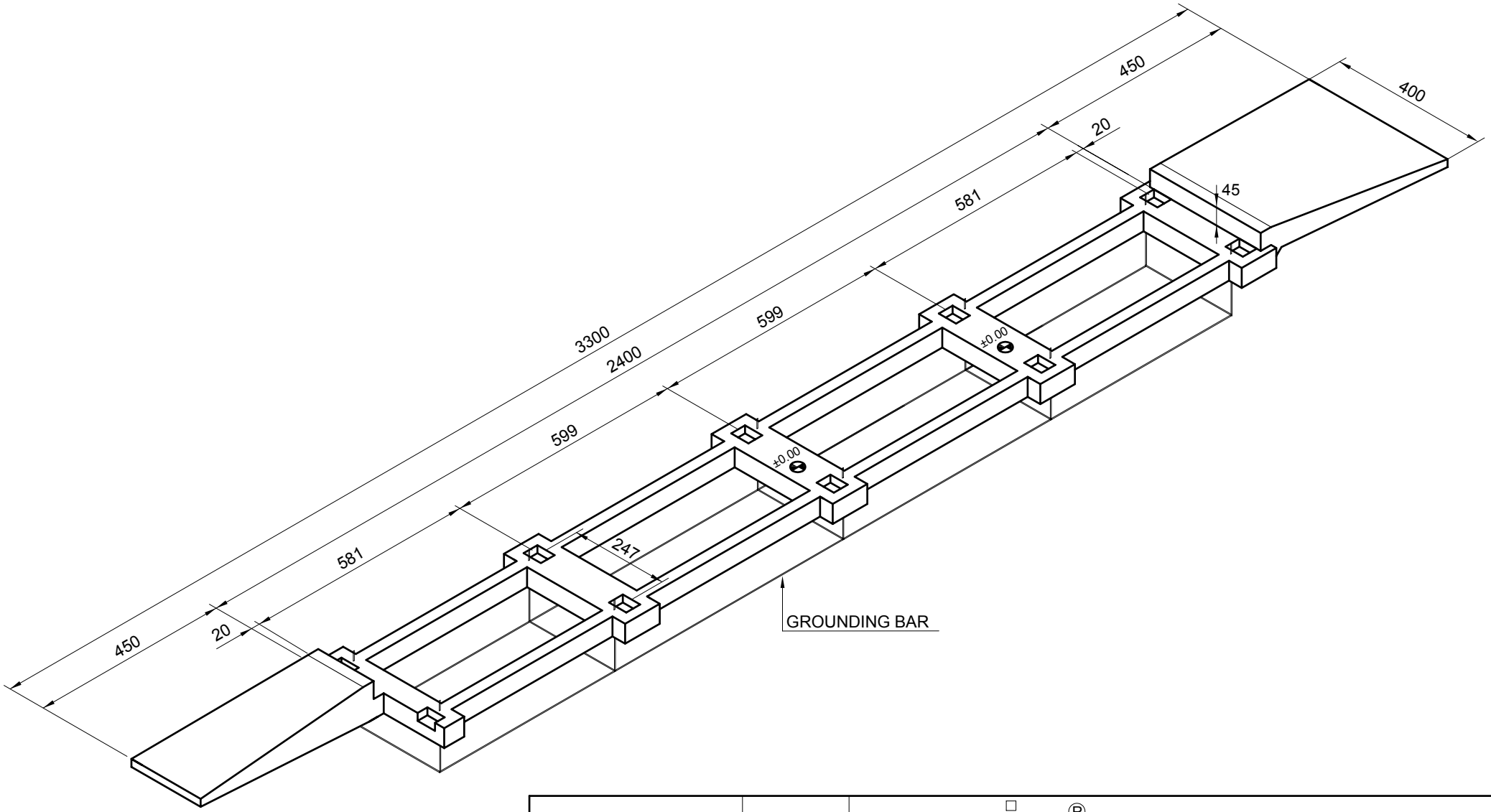

DRAWN BY:B.ÇINAR							
CONTROL :V.AKGÜN							
REVISION							DATE
A	B	C	D	E	F	G	22/04/2009

ESİT® LTD.

www.esitscale.com

DESCRIPTION
BRAND:ESİT
MODEL :3x24m 60t HIPPO-S Truck Scale Foundation